ITEM #

MODEL #

NAME #

SIS #

AIA #

Planetary Mixers
Planetary Mixer, 5 lt. - Electronic with Hub

600138 (DBE5BYA)

5 lt planetary mixer, bowl detection device, electronic speed variation. Equipped with stainless steel spiral hook, paddle, whisk and K type accessory hub. Equipped with highly resistant safety screen - BPA free

Short Form Specification

Item No.

Suitable for all kneading, blending and whipping operations. Aluminium body and metal base for complete stability. 5 litre capacity 18/10 (AISI 304) stainless steel bowl. Powerful asynchronous motor with electronic speed variation from 20 to 220 rpm (planetary movement). Removable/transparent solid safety screen - made of a bisphenol-A free (BPA) copolyester - activates the raising and lowering of the bowl. Bowl detection device allows the mixer to switch on only when the bowl and the safety screen are properly installed and positioned together.
Supplied with 3 stainless steel dw safe tools: spiral hook, paddle and whisk.
Equipped with accessory drive hub type K (accessories are not included).

APPROVAL:

Main Features

- Professional compact table top beater mixer for intensive kneading, mixing and whipping.
- Maximum capacity 1.5 kg flour, with 60% of hydration.
- Delivered with: - Spiral Hook, Paddle, Wire Whisk and Mixing Bowl for 5 lt. All made in stainless steel and dishwasher safe - Accessory drive hub (accessories are not included)
- Tools shape and size perfectly adapt to the bowl for uniform mixing of even small quantities.
- Electronic speed variator.
- Ergonomic and reliable knob to select the speed adjusting to the tool and mixture hardness.
- Removable safety screen activates the raising and lowering of the bowl.
- Bowl detection device allows the mixer to switch on only when the bowl and the solid safety screen are properly installed and positioned together.

Construction

- 304 AISI stainless steel bowl - 5 lt capacity.
- Compact and portable design.
- Asynchronous motor with high start-up torque.
- Variable speed from 20 to 220 rpm (planetary movement), to adjust to the selected tool and mixture hardness.
- Planetary movement based on self lubricating gears, eliminating any risk of leaks.
- Water protected planetary system (IP55 electrical controls, IP34 appliance overall).
- Transparent solid safety screen made of Eastman Tritan™ copolyester BPA free, impact resistant and stays clear and durable after several dishwashing cycle. Eastman&Tritan are trademarks for Eastman Chemical Company.
- Variable speed rotation of the tools from 67 rpm to 740 rpm.
- Sturdy metal accessory hub able to withstand heavy usage.

Included Accessories

- 1 of Bowl 5 lt for BE5 PNC 653295
- 1 of Stainless steel paddle 5 lt PNC 653756
- 1 of Stainless steel whisk 5 lt PNC 653757
- 1 of Stainless steel spiral hook 5 lt PNC 653765

Optional Accessories

- 60 mm meatmincer for attachment type K (12 mm square hub) and 1 disc PNC 653043 ❑
- 3 discs (3-4,5-8 mm) for meatmincer PNC 653044 ❑
- Bowl 5 lt for BE5 PNC 653295 ❑
- Pasta kit accessory (lasagne 142,5mm) PNC 653296 ❑
- Pasta kit accessory (spaghetti 2mm) PNC 653298 ❑
- Pasta kit (lasagne,tagliatelle, tagliolini) PNC 653300 ❑
- Stainless steel paddle 5 lt PNC 653756 ❑
- Stainless steel whisk 5 lt PNC 653757 ❑
- Stainless steel spiral hook 5 lt PNC 653765 ❑
- Closed splash guard for BE5/8 with accessory hub PNC 653782 ❑

The company reserves the right to make modifications to the products without prior notice. All information correct at time of printing.

Planetary Mixers
Planetary Mixer, 5 lt. - Electronic with Hub

Front

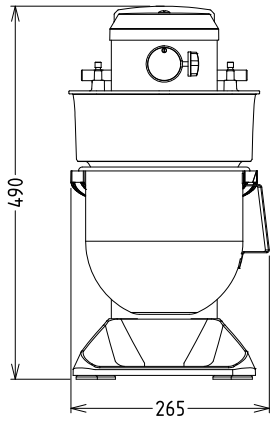

Side

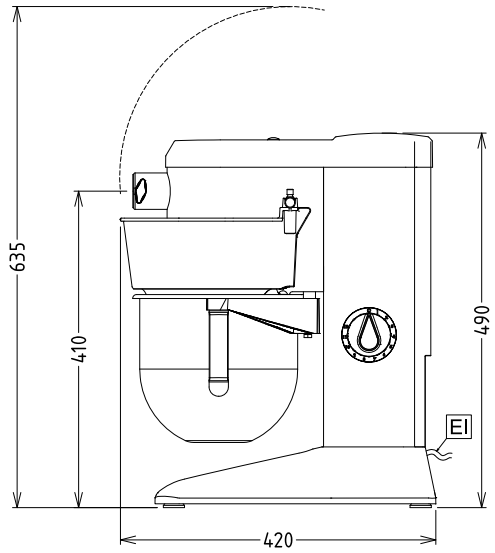

EI = Electrical inlet (power)

Top

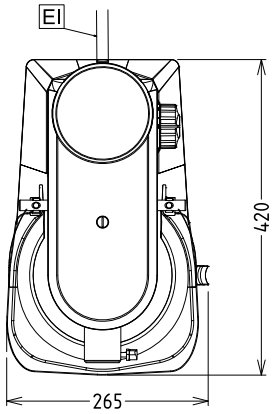

Electric	
Supply voltage:	200-240 V/1N ph/50/60 Hz
Electrical power, max:	0.45 kW
Total Watts:	0.45 kW
Capacity:	
Performance (up to):	1.5 kg/Cycle
Capacity:	5.5 litres
Key Information:	
External dimensions, Width:	266 mm
External dimensions, Depth:	416 mm
External dimensions, Height:	487 mm
Shipping weight:	19 kg
Net weight (kg):	17
Cold water paste:	1.5 kg with Spiral hook
Egg whites:	10 with Whisk

The company reserves the right to make modifications to the products without prior notice. All information correct at time of printing.